Aunthentic Repaint

CITYCRAFT™
PAPERMODELS

SPECIAL LIVERY

TITAN AIRWAYS

FIFA WORLD CUP 2026



AIRBUS A320-233

Titan Airways (Coca-Cola FIFA World Cup Livery) Airbus A320 296

As part of the upcoming FIFA World Cup, which will be held in various cities across the United States, Mexico, and Canada between June 11 and July 19 of this year (2026), Titan Airways gave one of its aircraft a special livery.

The aircraft in question is a 14-year-old Airbus A320, registration G-POWK, manufactured at Airbus's Hamburg facility.

Last December, after its conversion process, it was unveiled sporting its new "Coca-Cola FIFA World Cup" livery.





The Airbus A320 family is a series of narrow-body airliners developed and produced by Airbus. The A320 was launched in March 1984, first flew on 22 February 1987, and was introduced in April 1988 by Air France. The first member of the family was followed by the stretched A321 (first delivered in January 1994), the shorter A319 (April 1996), and the even shorter A318 (July 2003).

The A320 series has two variants, the A320-100 and A320-200. Only 21 A320-100s were produced. These aircraft, the first to be manufactured, were delivered to Air Inter – later acquired by Air France – and British Airways as a result of an order from British Caledonian made prior to its acquisition. The primary differences from the -100 were the -200's wingtip fences and increased fuel capacity, providing increased range.

Scale: 1:72
Length: (520mm)
Width: (497mm)
Parts: 307 (21 pages)

This model has been designed in 2 styles.
On the ground (with wheels)
In Flight style (without wheels)
Is nesessary assemble the stand for the "in flight style*

*This model is Designed for Papercraft and is different in several ways from the Real Life Plane.
*Build the model by carefully watching the Assembly Instructions Video.
*Make sure you have the correct printer settings before printing.
It is recommended to use Adobe Acrobat Reader to print models at 100% scale option.

© 2024 CityCraft

Airbus A320-233 | Coca-Cola FIFA World Cup Livery G-POWK

CITYCRAFT™ PAPERMODELS

Aunthentic Repaint

By Mario Solorzano

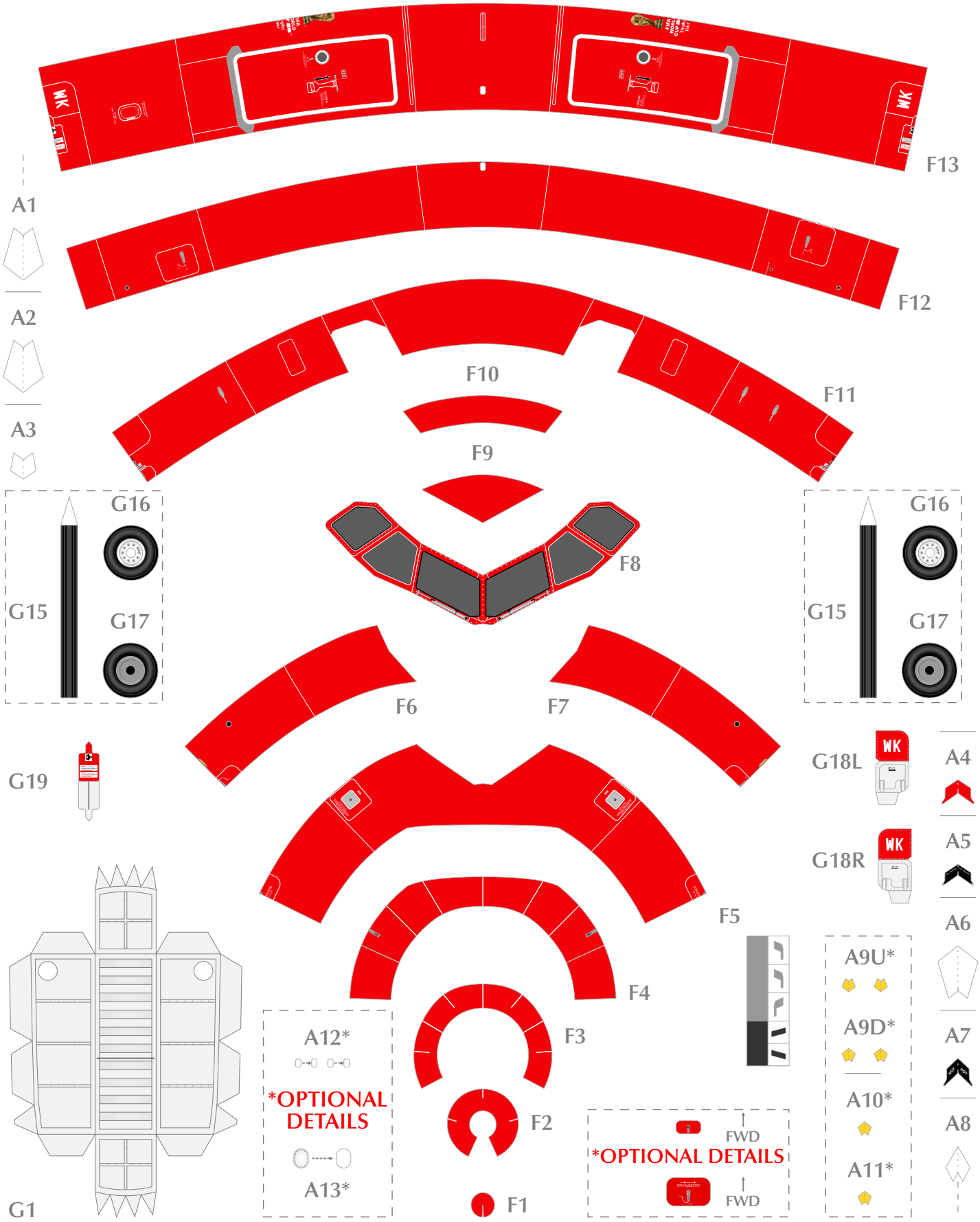

© 2024 CityCraft

Scale 1:72

02/21

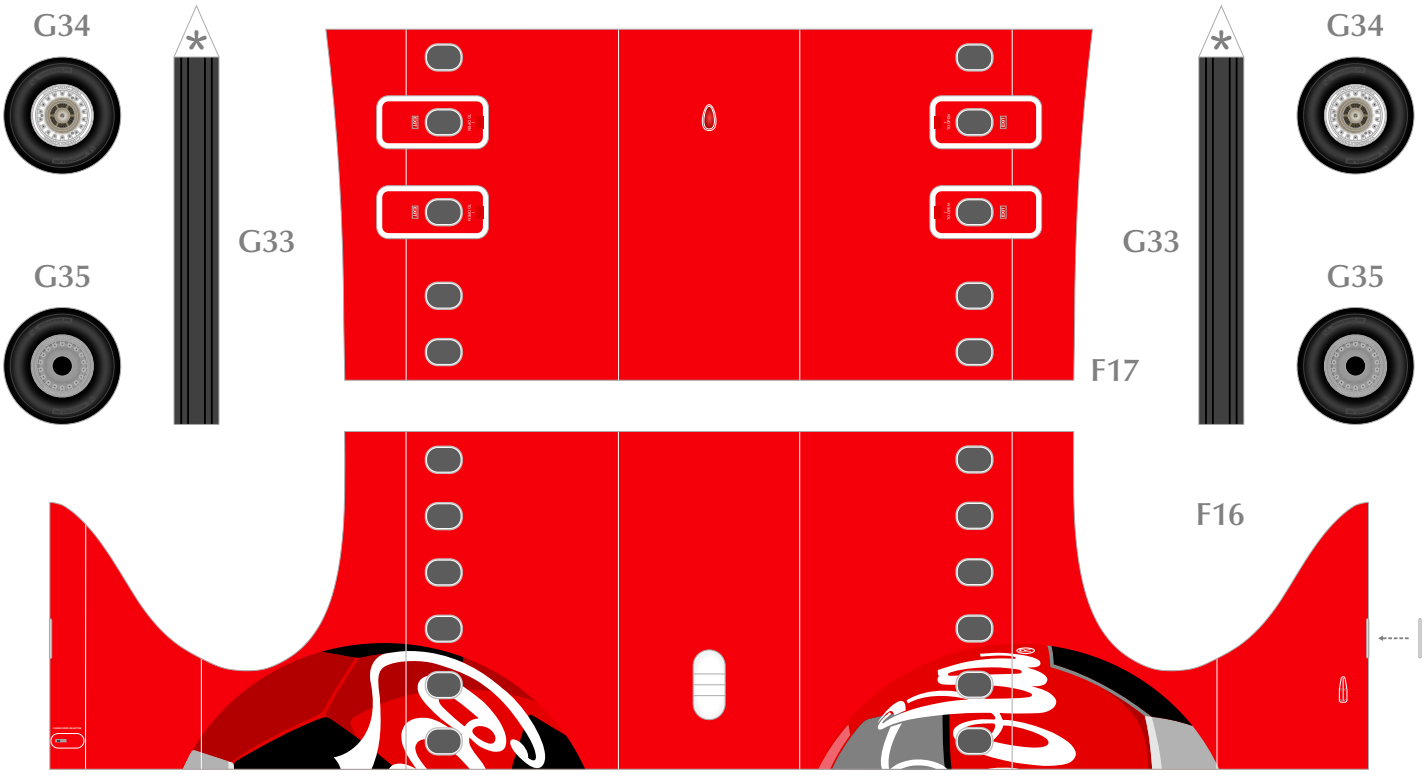

AIRBUS A321

AIRBUS A321

(F15e) IS ONLY FOR THE A321 SERIES

AIRBUS A321

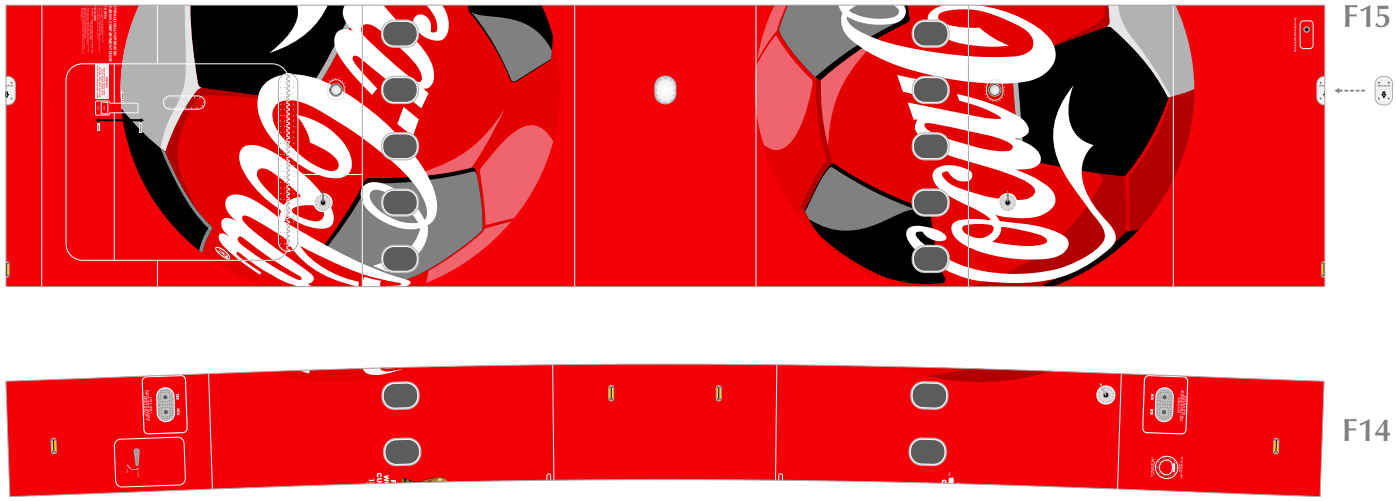

© 2024 CityCraft

F21

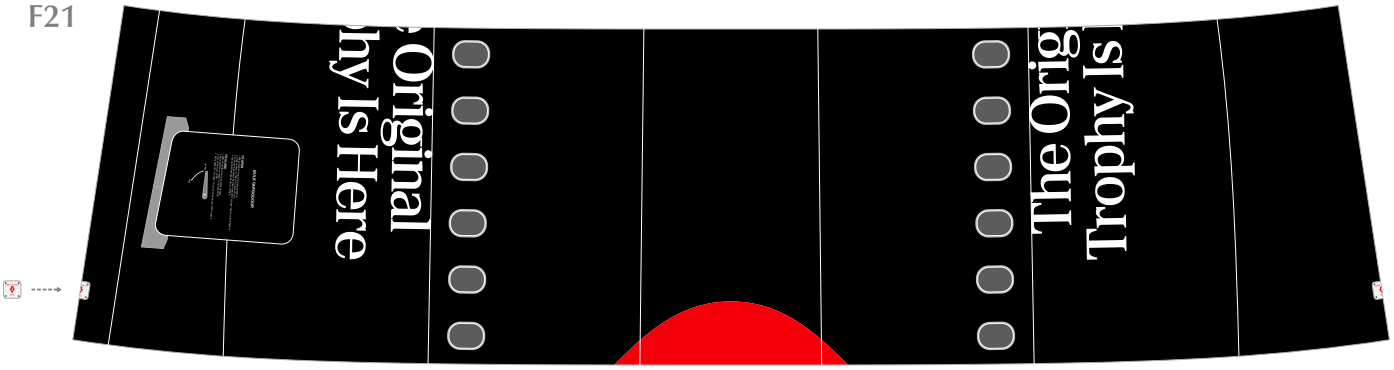

F20

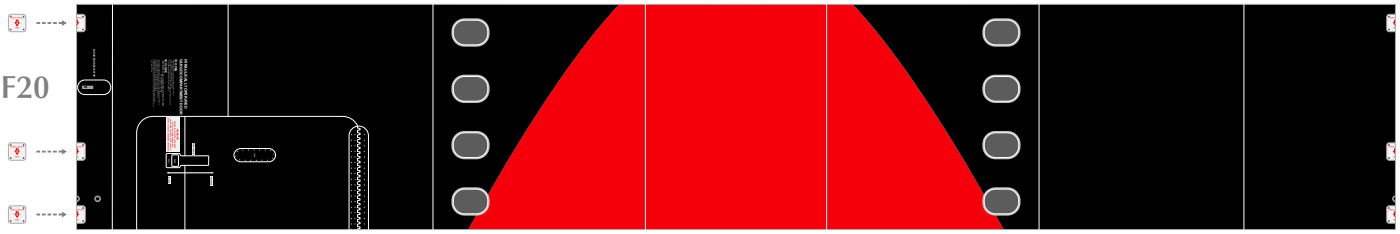

AIRBUS A321

AIRBUS A321

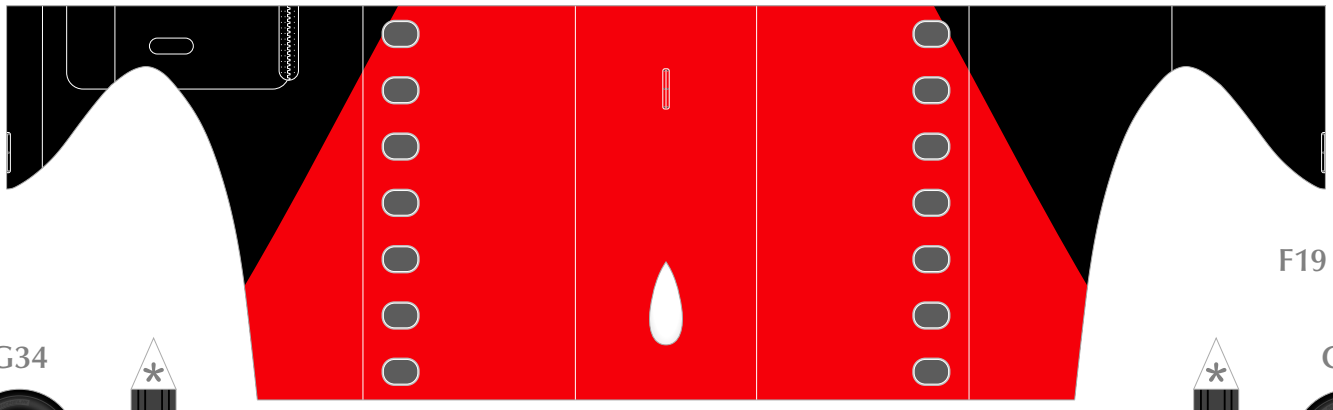

F19

G34





G33

F18

G35





G34



G33

G35



© 2024 CityCraft

Airbus A320-233 | Coca-Cola FIFA World Cup Livery G-POWK

CITYCRAFT™ PAPERMODELS

Aunthentic Repaint

By Mario Solorzano

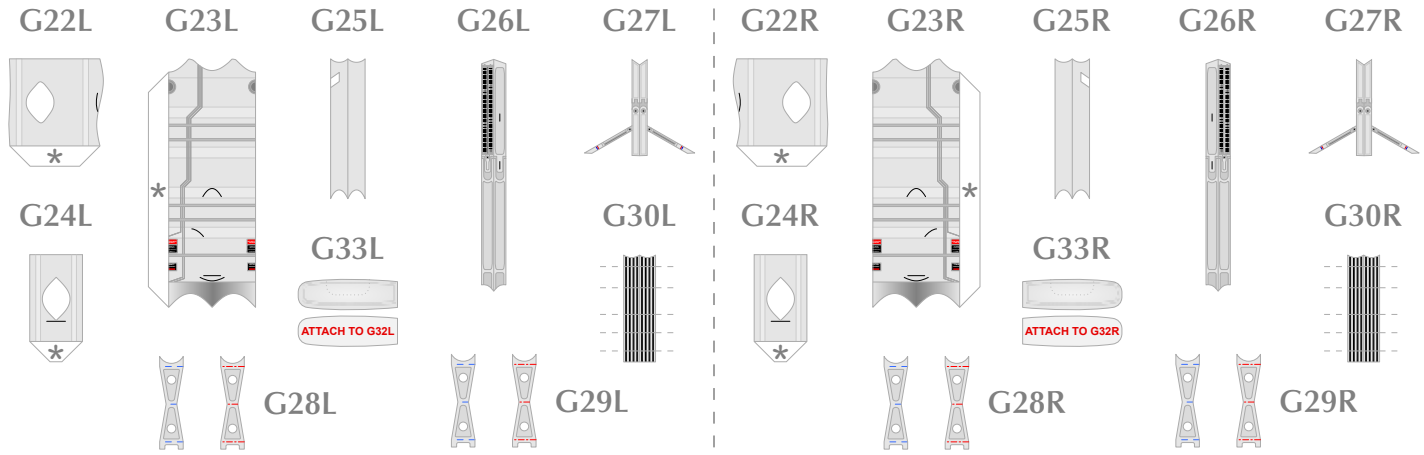

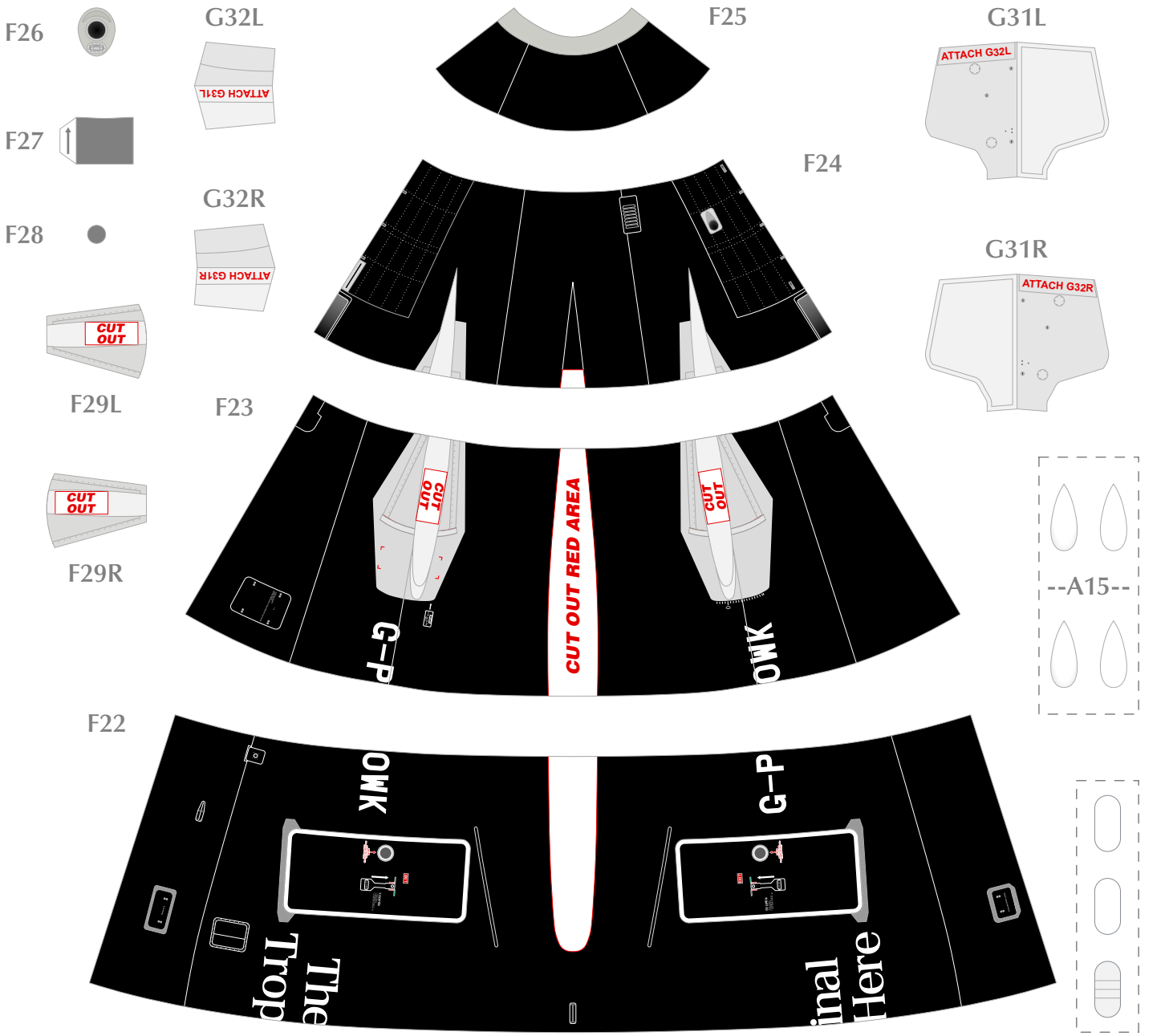

© 2024 CityCraft

Scale 1:72

Airbus A320-233 | Coca-Cola FIFA World Cup Livery G-POWK

CITYCRAFT™ PAPERMODELS

Aunthentic Repaint

By Mario Solorzano



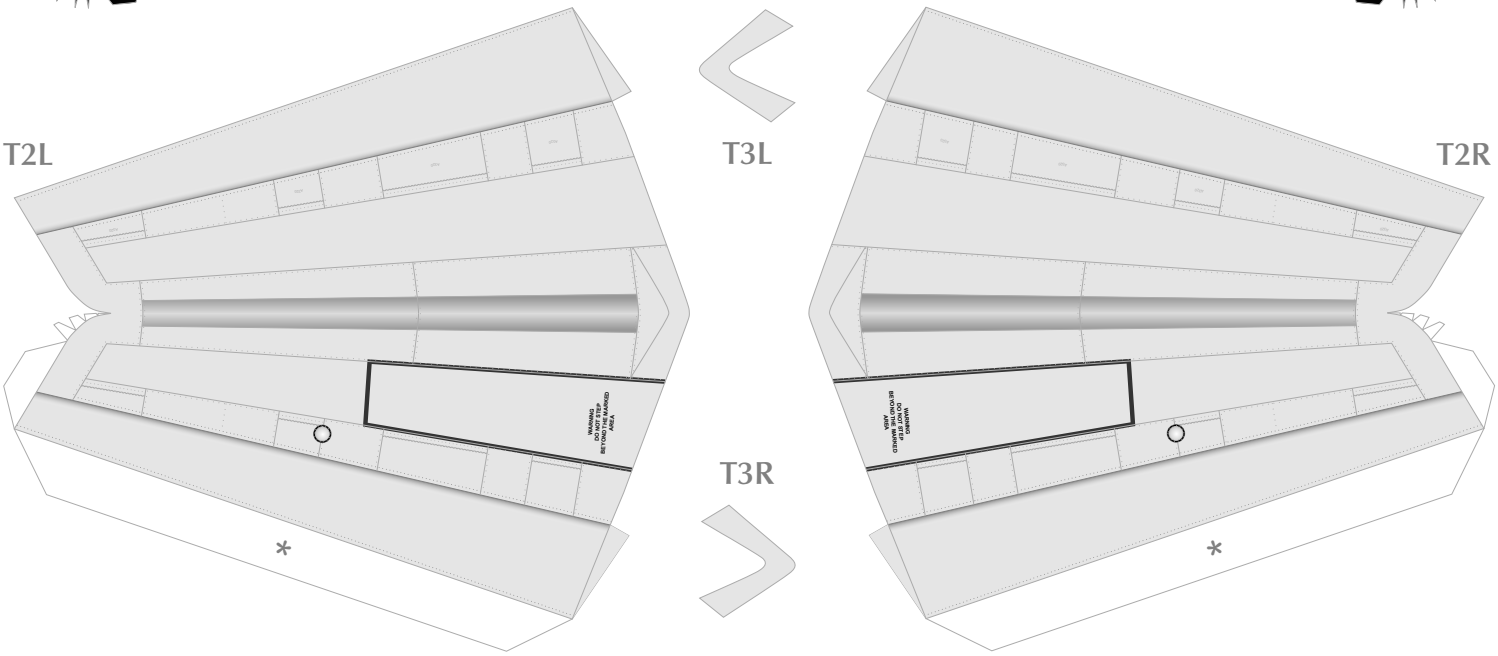

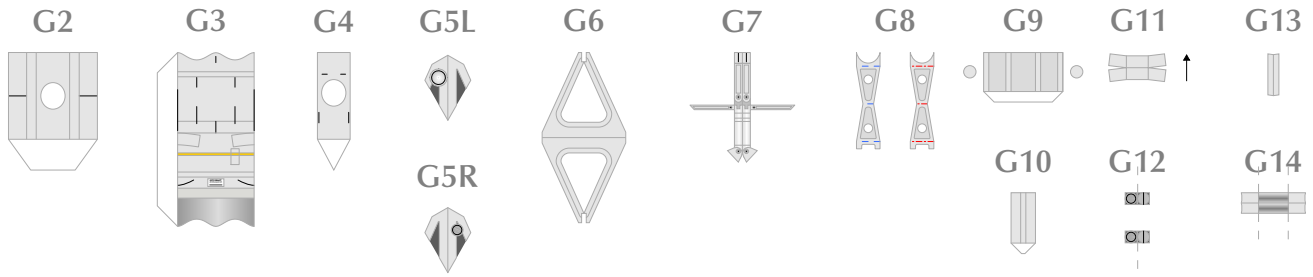

© 2024 CityCraft

Scale 1:72

06/21

Airbus A320-233 | Coca-Cola FIFA World Cup Livery G-POWK

CITYCRAFT™ PAPERMODELS

Aunthentic Repaint

By Mario Solorzano

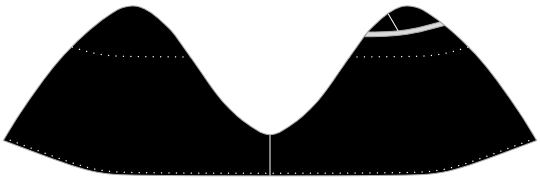

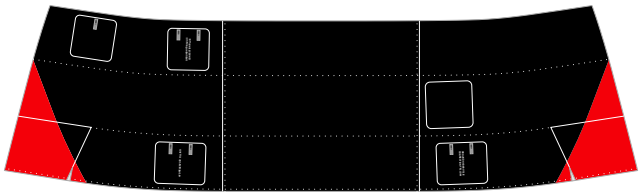

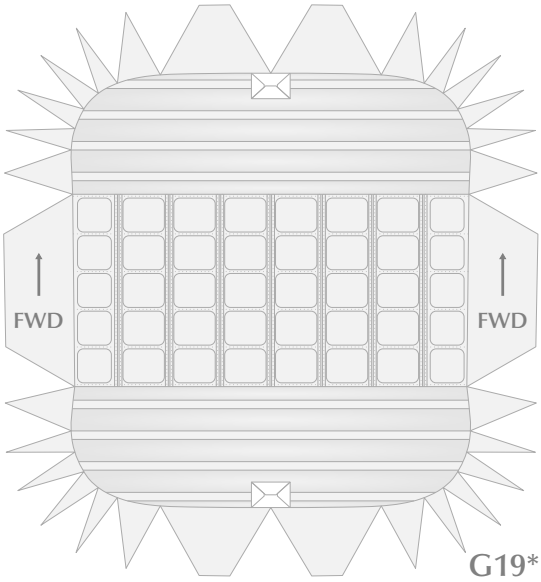

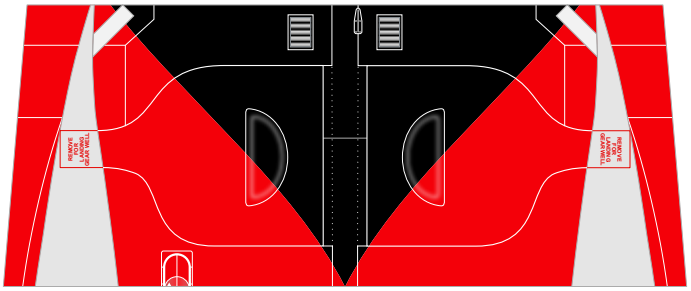

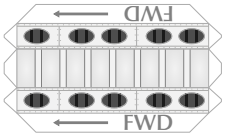

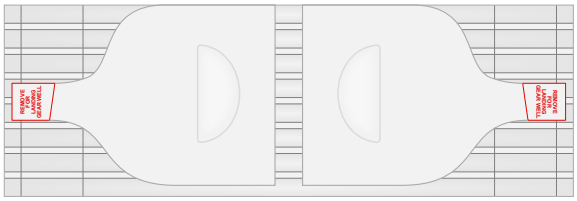

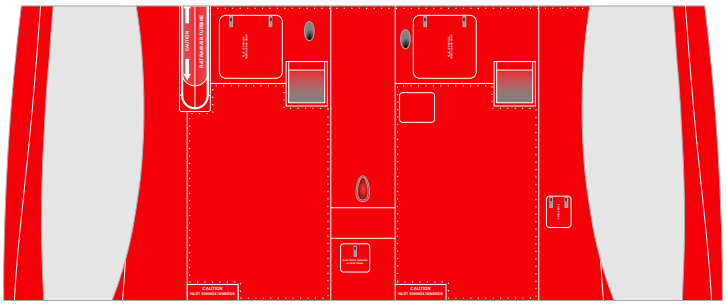

* Optional Parts: for retractable landing gear and RC Models

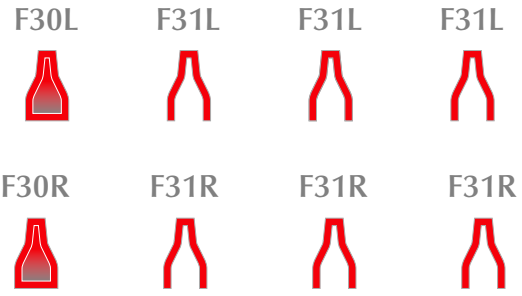

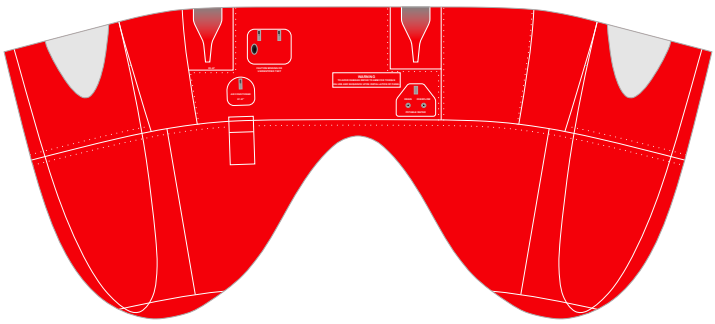

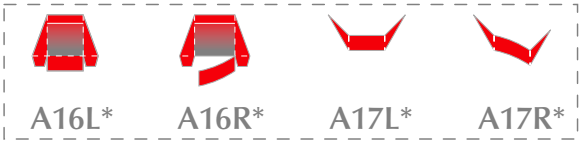



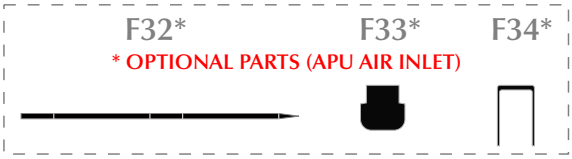





© 2024 CityCraft

Scale 1:72

07/21

Airbus A320-233 | Coca-Cola FIFA World Cup Livery G-POWK

CITYCRAFT™ PAPERMODELS

Aunthentic Repaint

Engines: IAE V2500

By Mario Solorzano

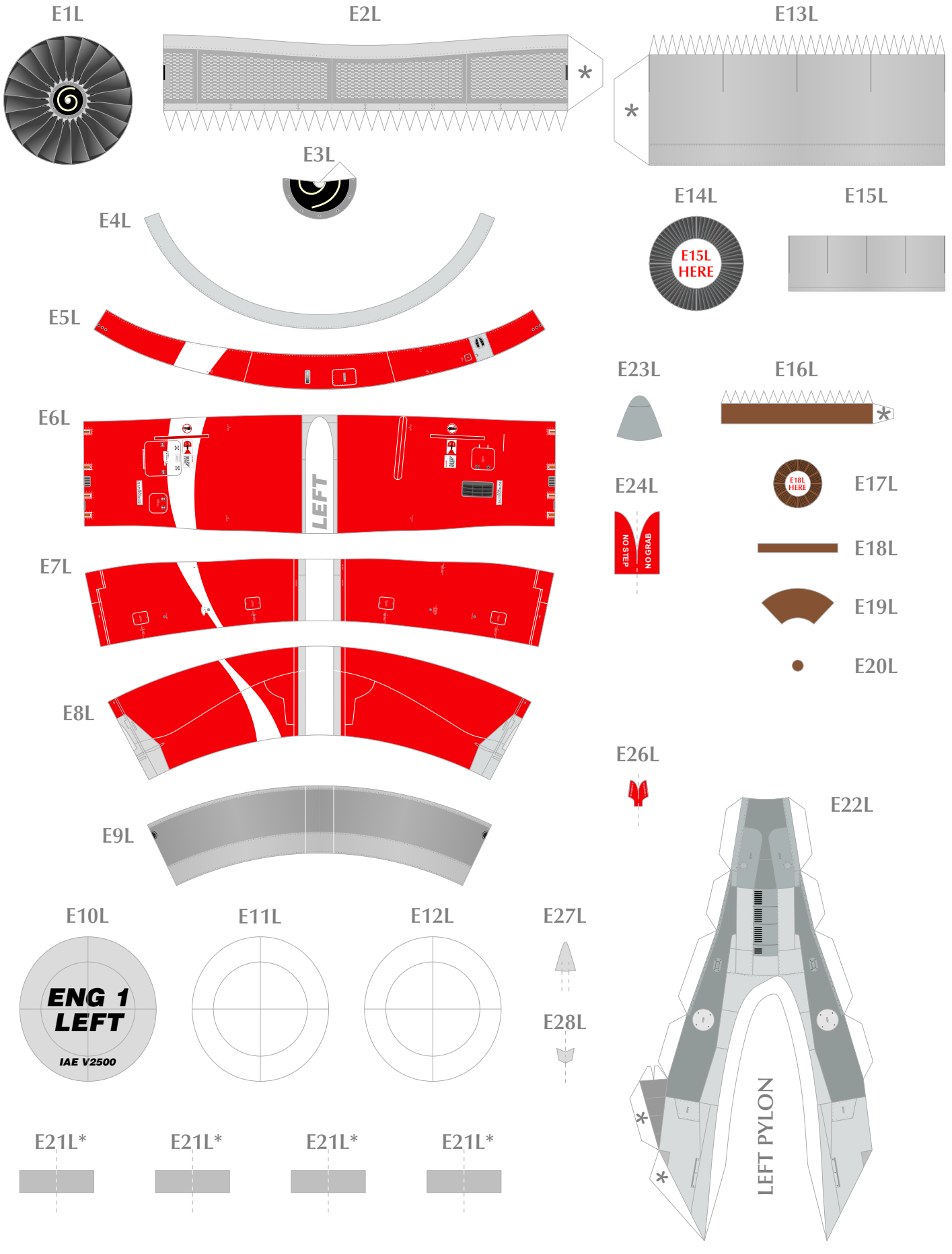

© 2024 CityCraft

Scale 1:72

08/21

Airbus A320-233 | Coca-Cola FIFA World Cup Livery G-POWK

CITYCRAFT™ PAPERMODELS

Aunthentic Repaint

Engines: IAE V2500

By Mario Solorzano

E1R



E2R

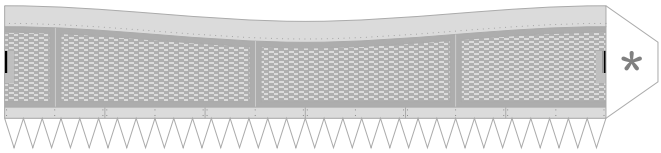

E13R

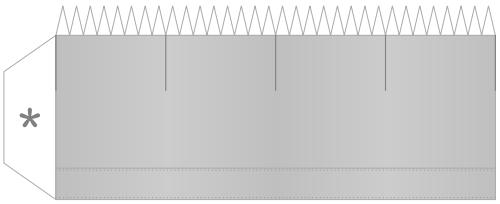

E3R



E4R



E14R



E15R



E5R



E23R



E16R



E6R

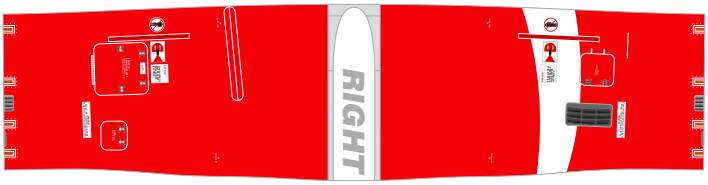

E24R



E17R



E18R



E7R

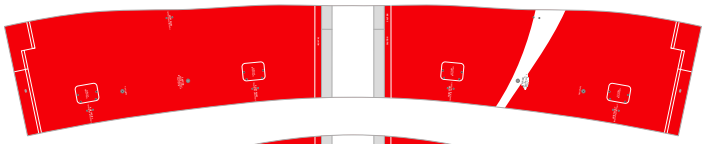

E19R



E20R



E8R

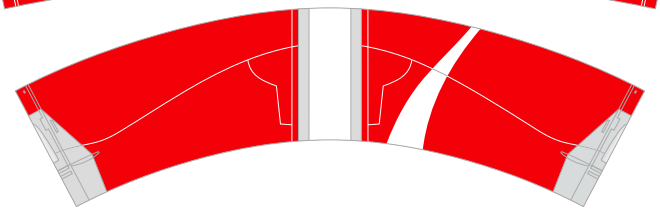

E26R



E22R

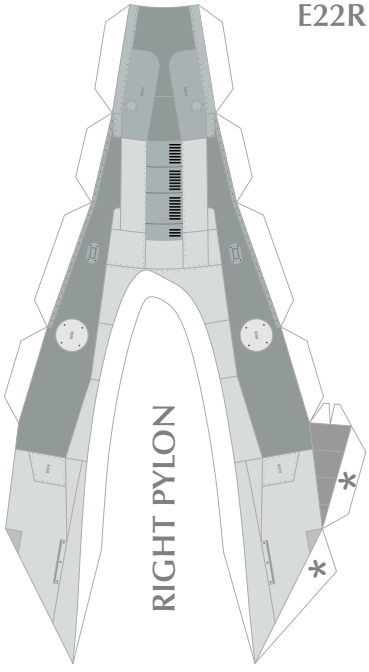

E9R

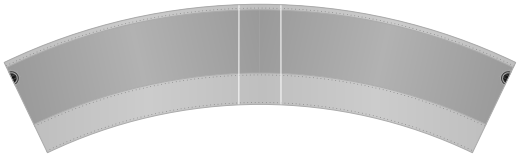

E10R



E11R

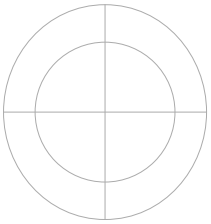

E12R

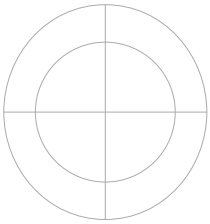

E27R



E28R



E21R*



E21R*



E21R*



E21R*



© 2024 CityCraft

Scale 1:72

09/21

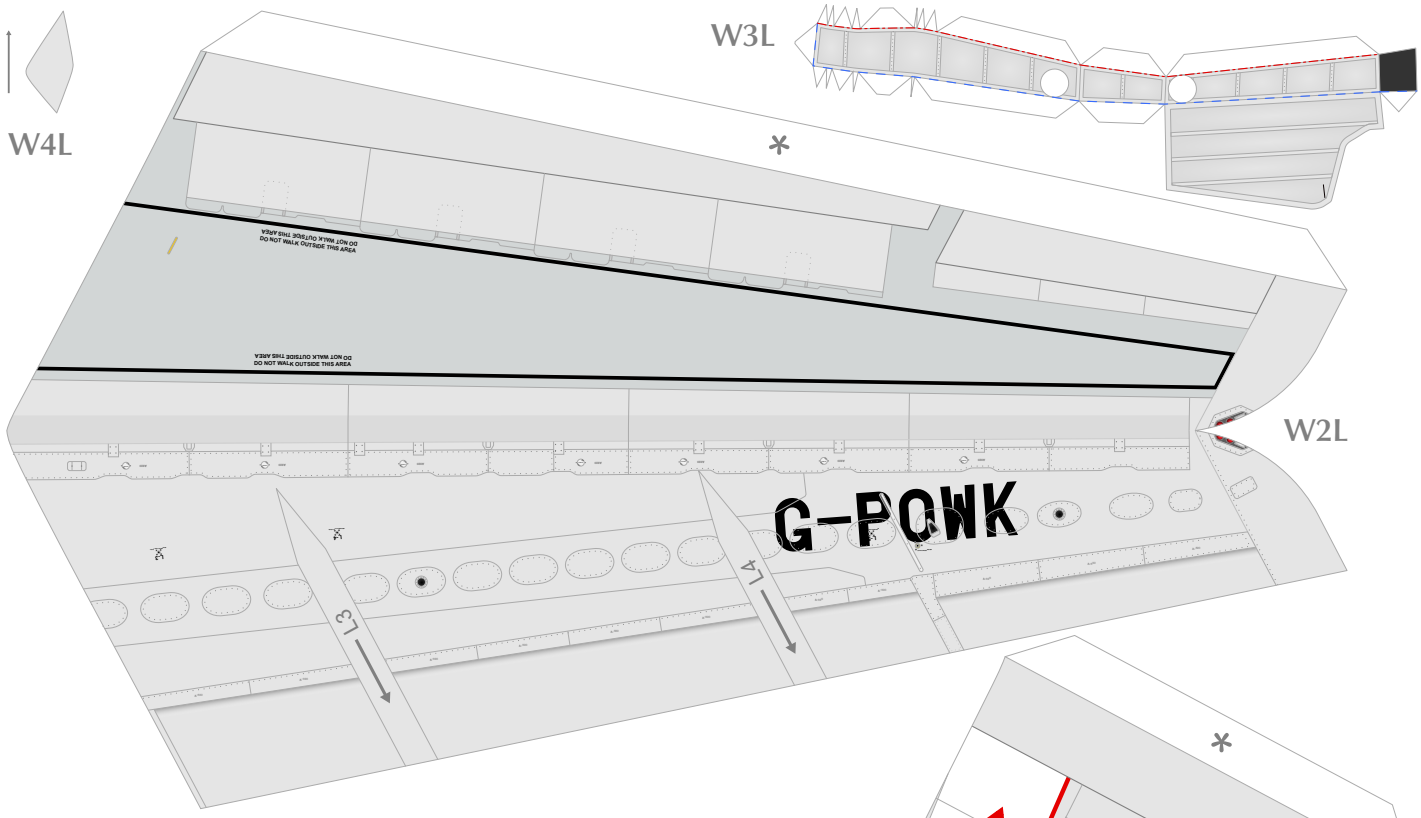

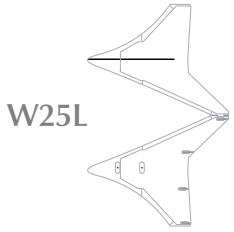

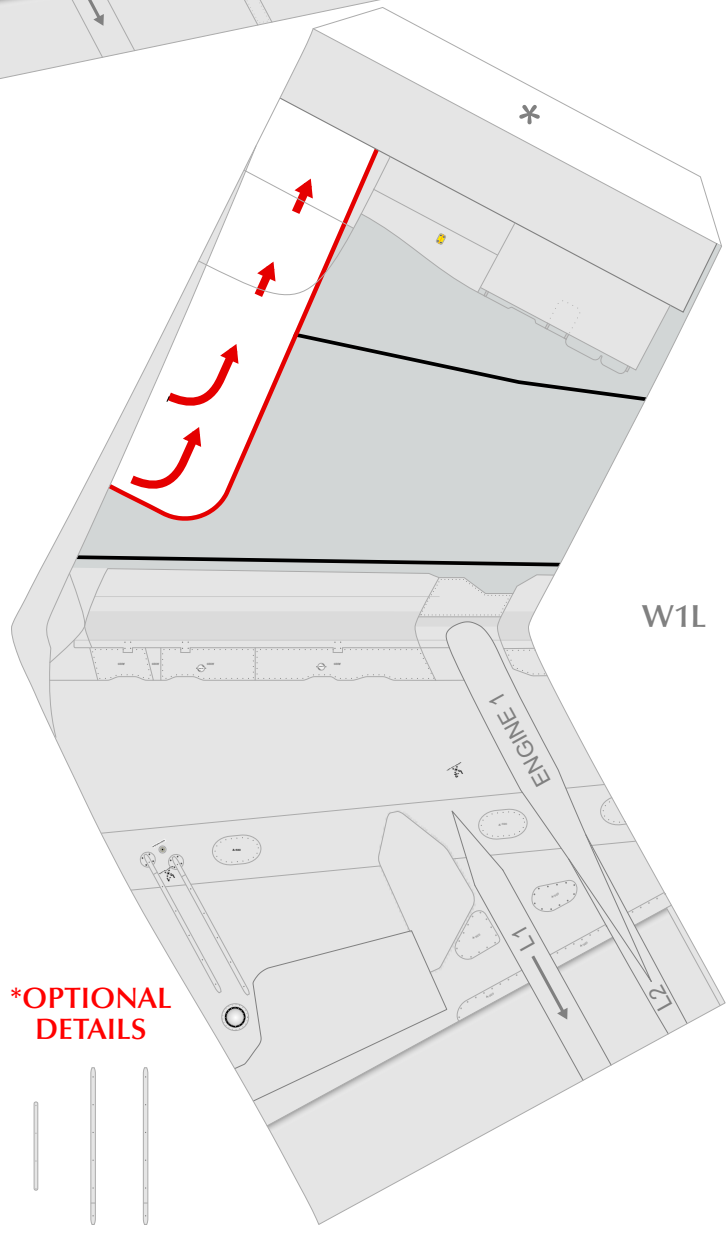





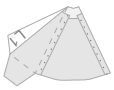



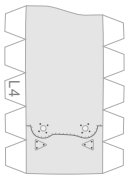

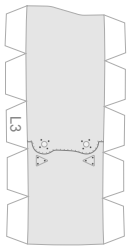

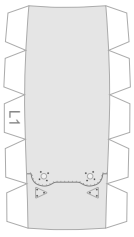

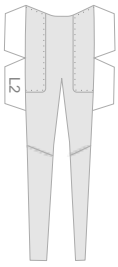

*OPTIONAL DETAILS







© 2024 CityCraft

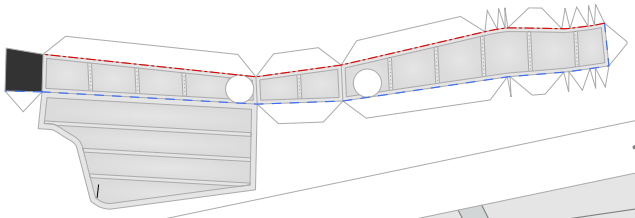

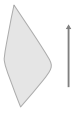

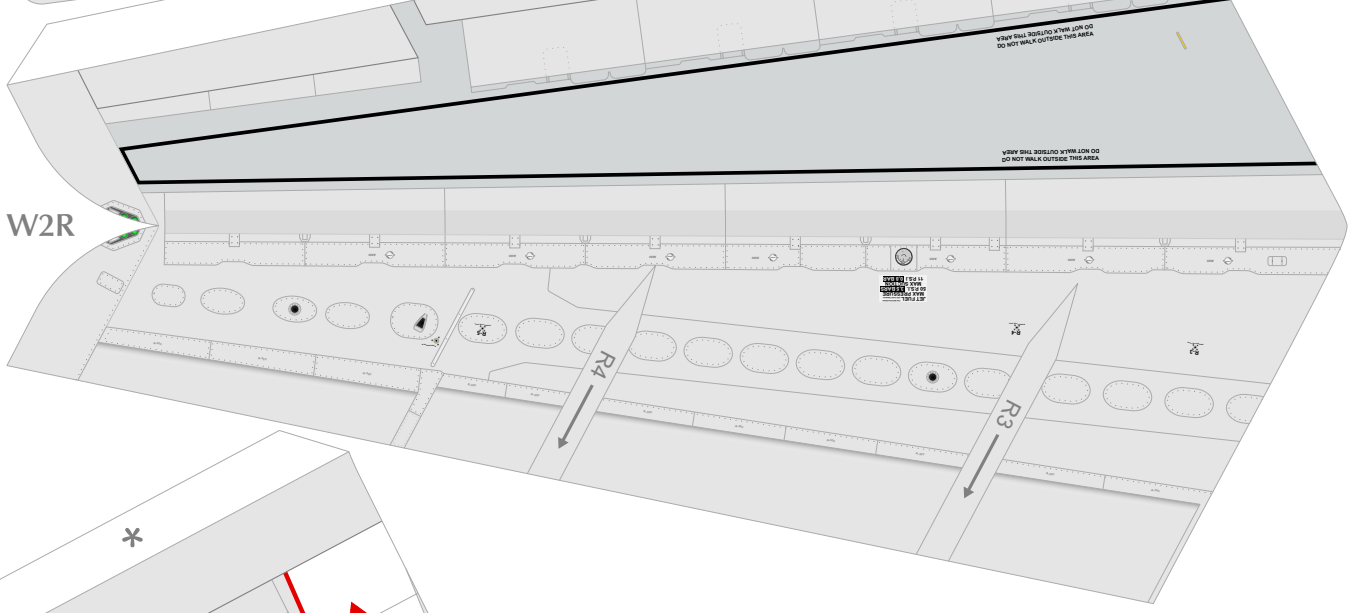

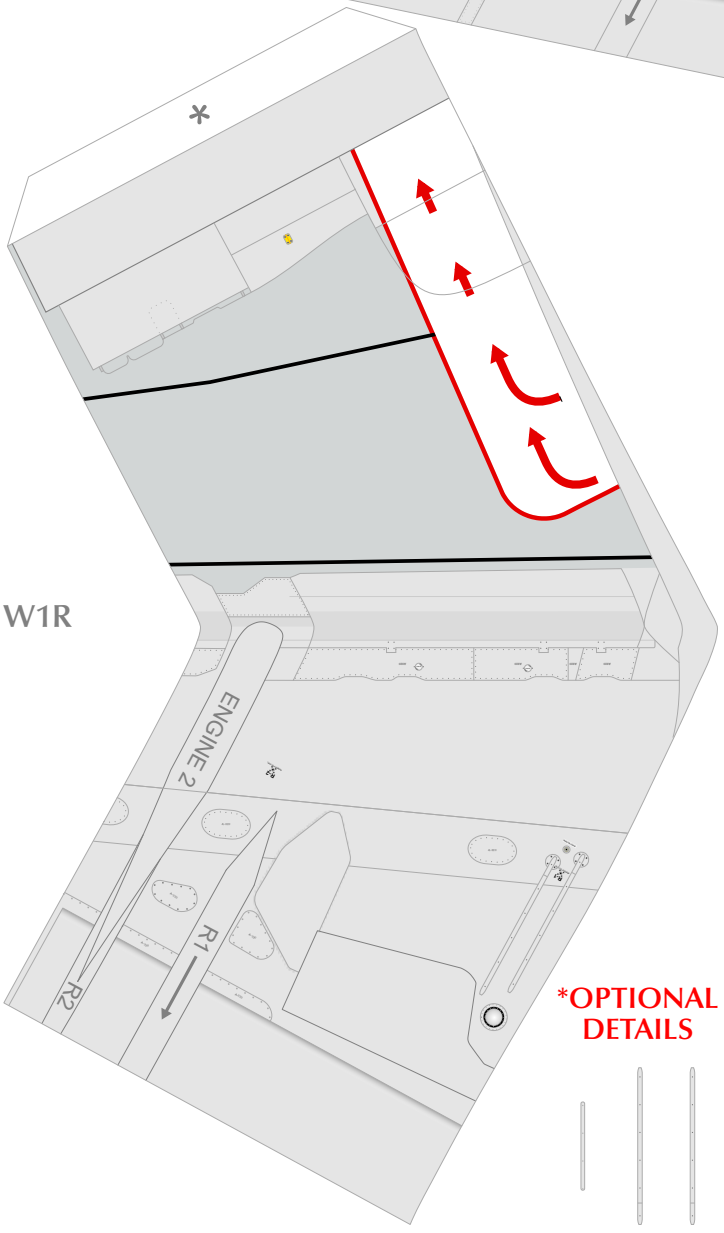

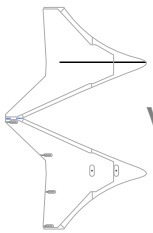

W26R



W8R

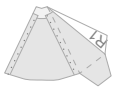

W11R



W14R

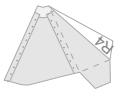

W27R

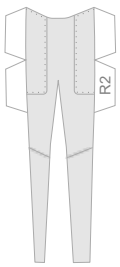

W7R

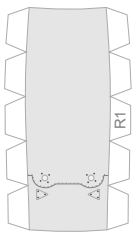

W10R

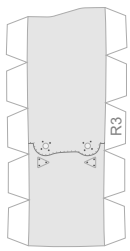

W13R

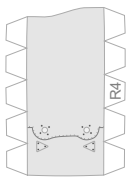

*OPTIONAL DETAILS

W6R



W9R



W12R



© 2024 CityCraft

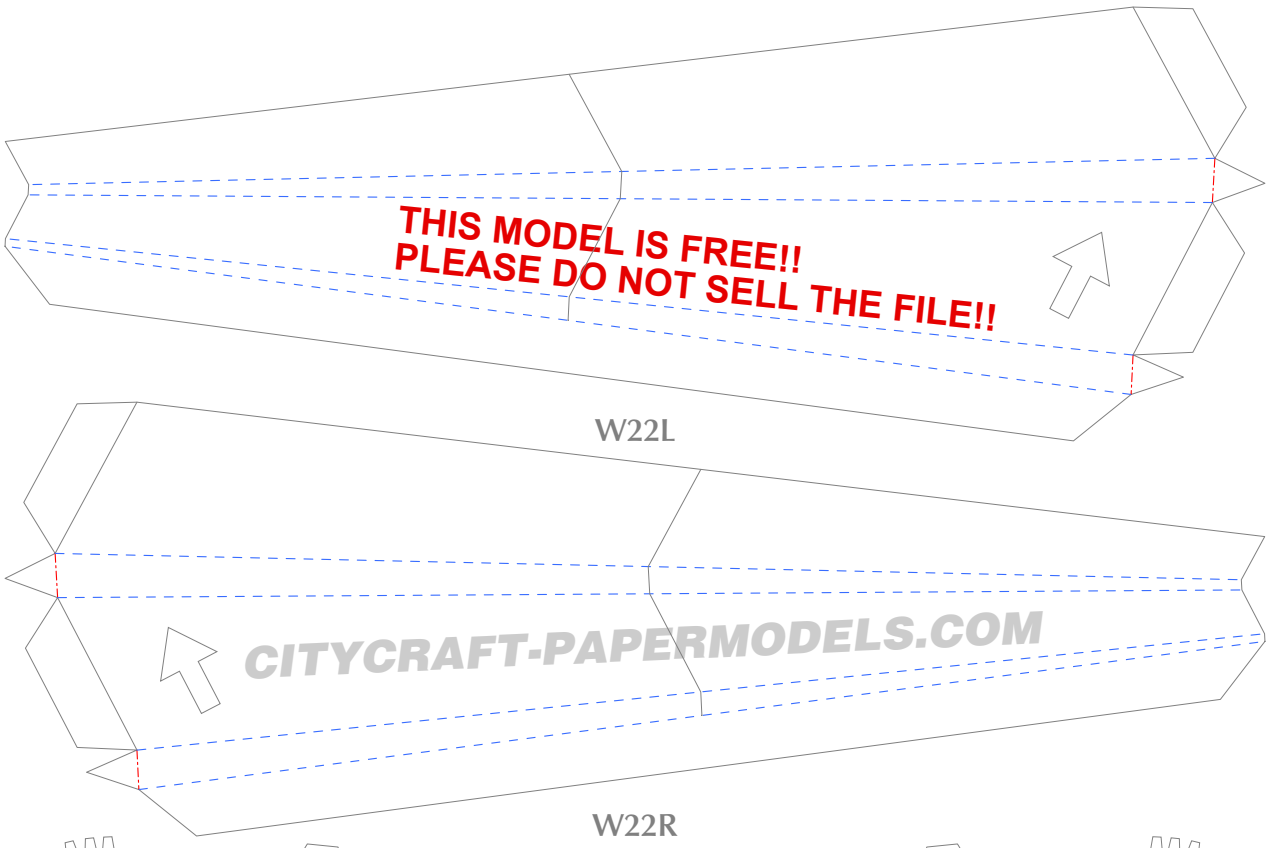
THIS MODEL IS FREE!!
PLEASE DO NOT SELL THE FILE!!
W22L
CITYCRAFT-PAPERMODELS.COM
W22R


W18L
W18R
W19L
W19R
W20L
W20R

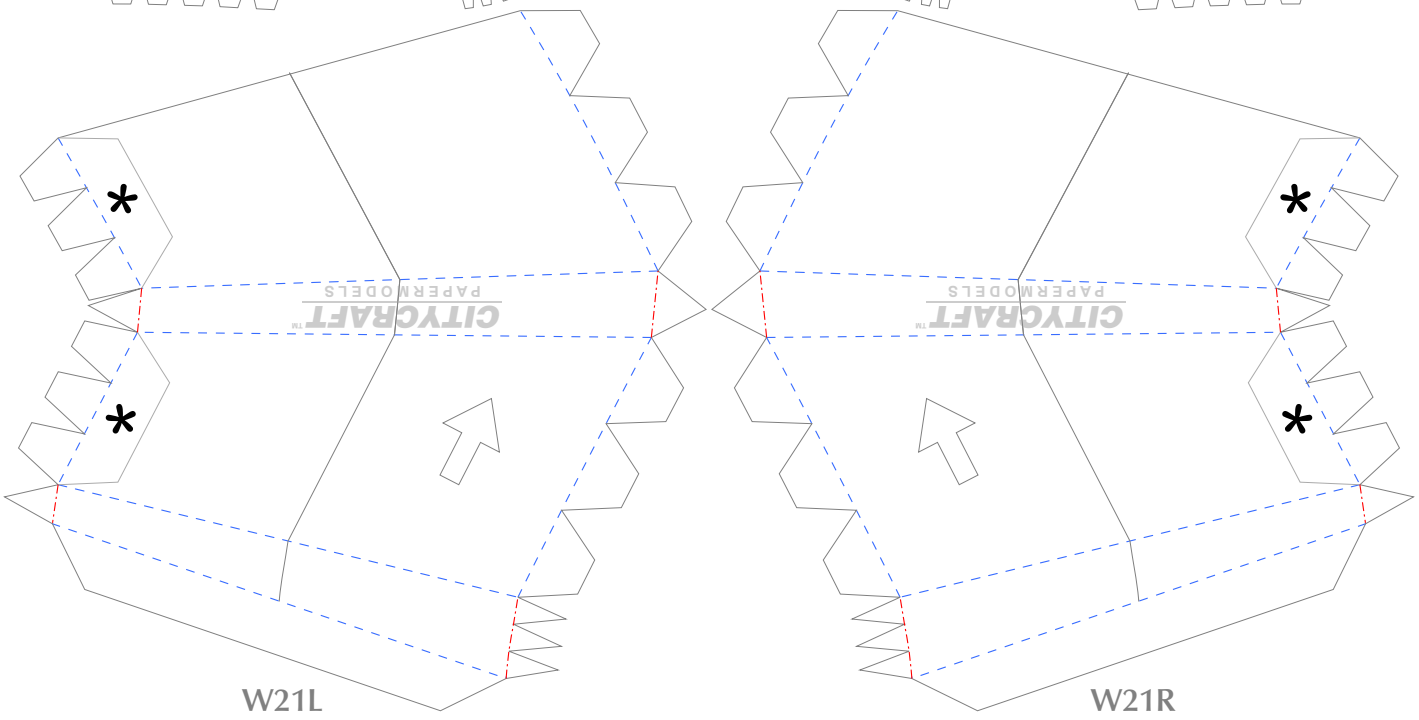
W21L
W21R

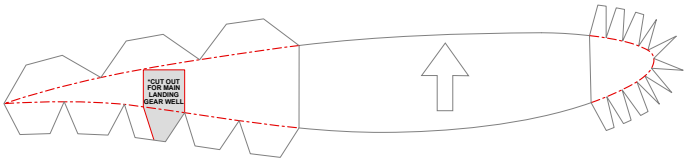

W15R

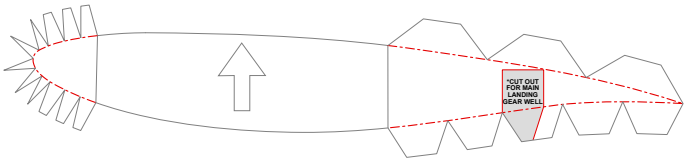

W15L

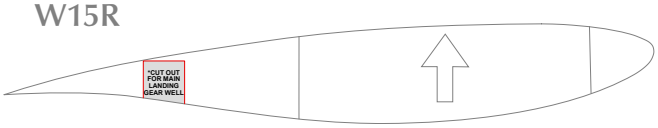

W16R

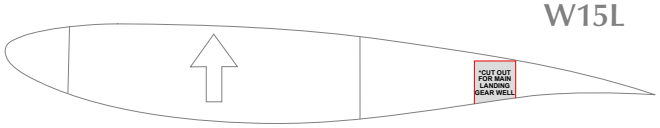

W16L

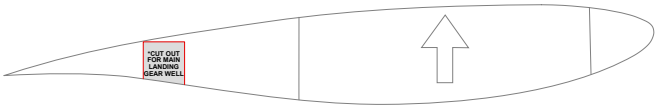

W17R

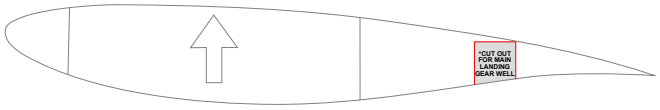

W17L



S1



S2



S3

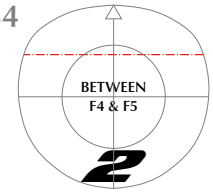

S4

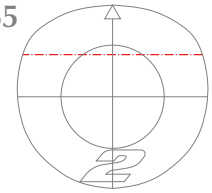

S5

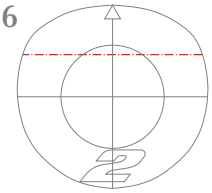

S6



S57L



S57R

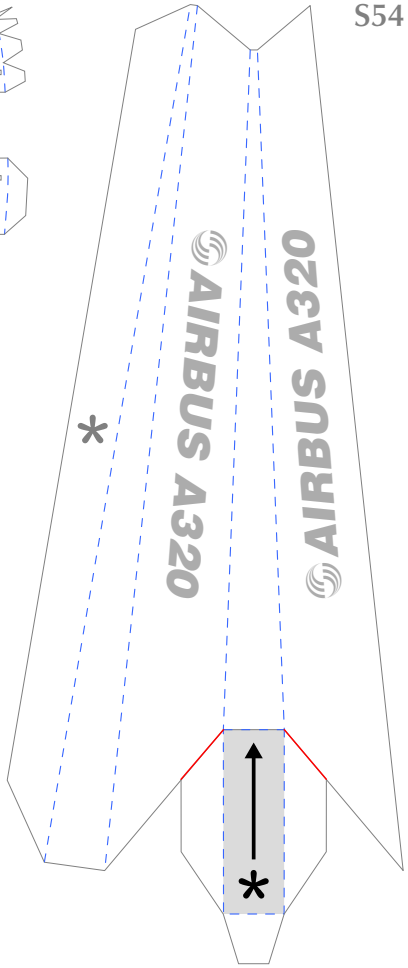

S54

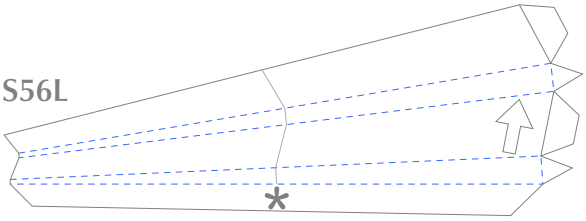

S56L

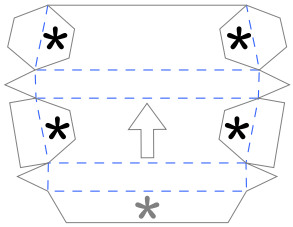

S55

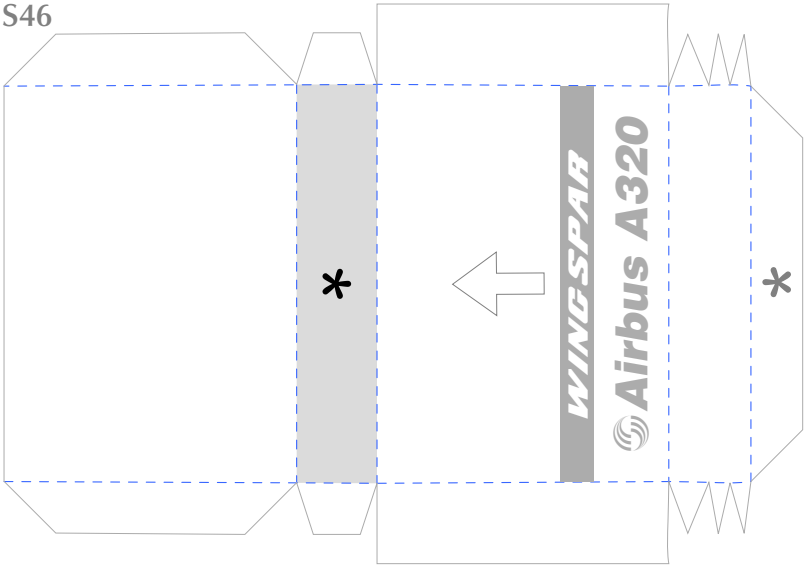

S46

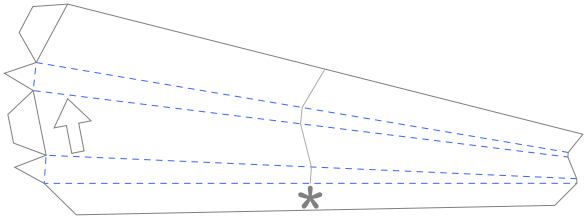

S7

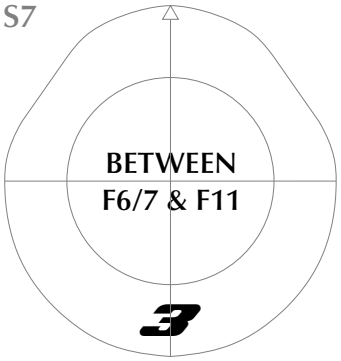

S8

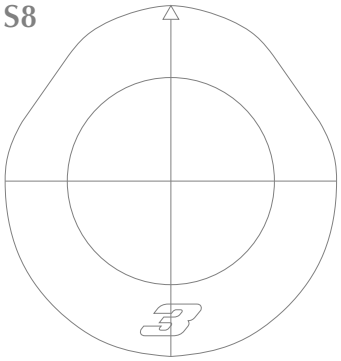

S9

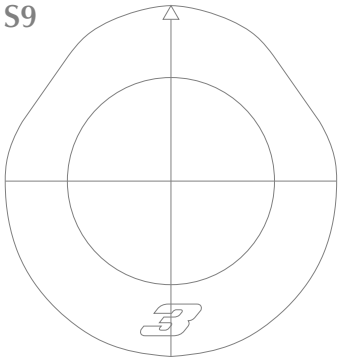

S10

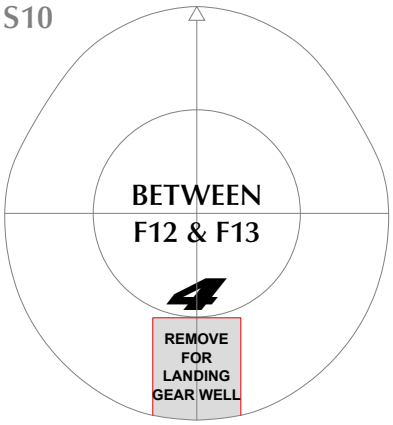

S11

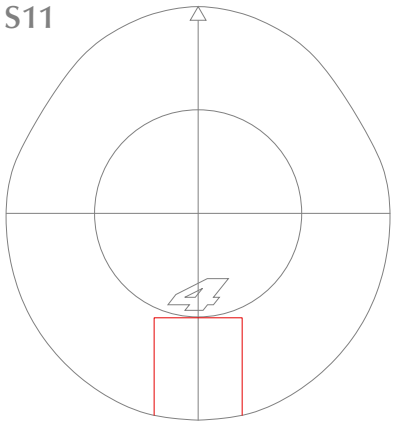

S12

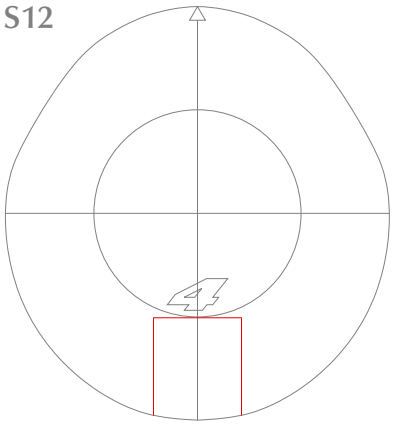

S13

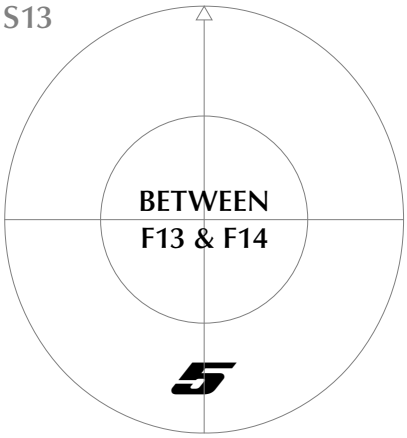

S14

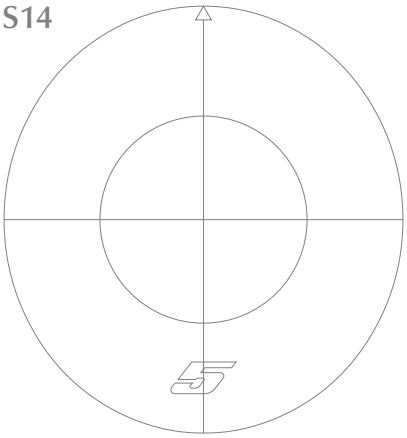

S15

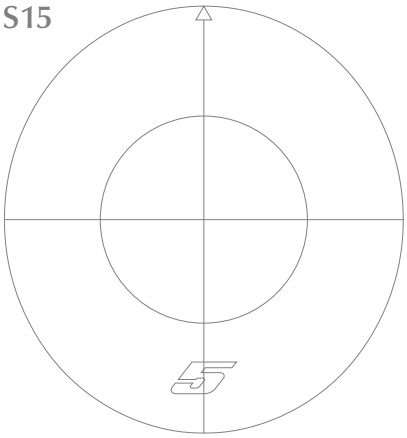

S16

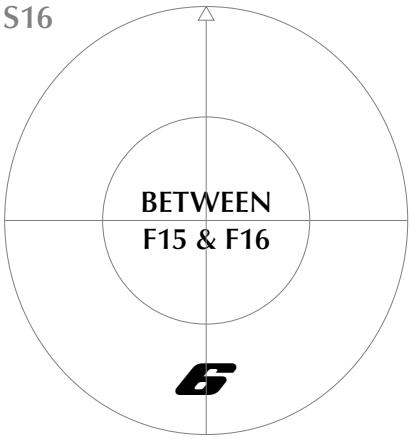

S17

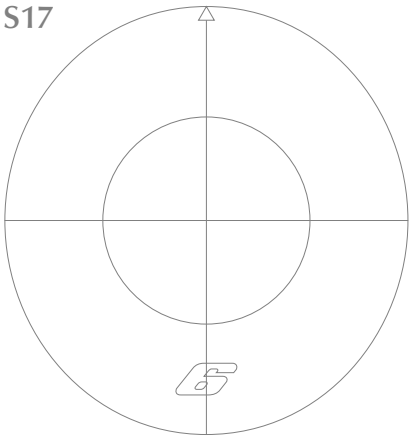

S18

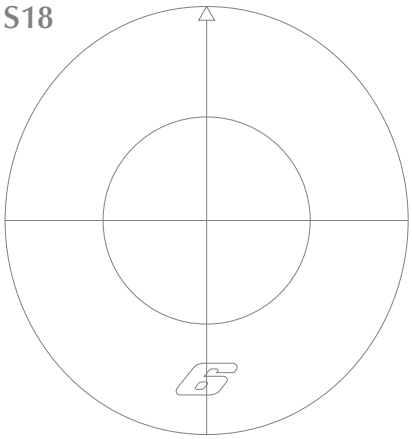

© 2024 CityCraft

S19

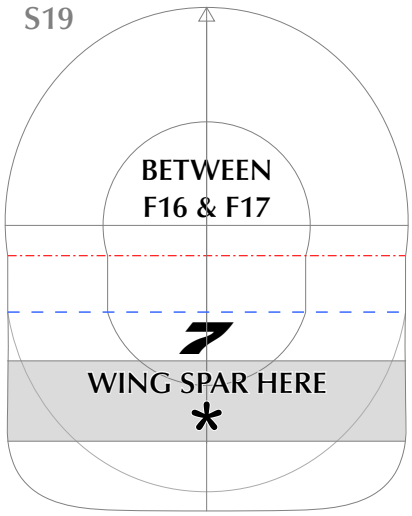

S20

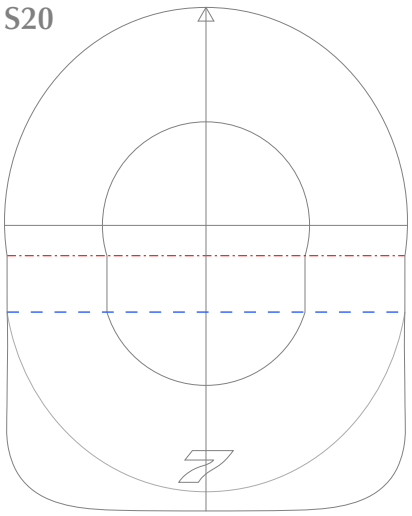

S21

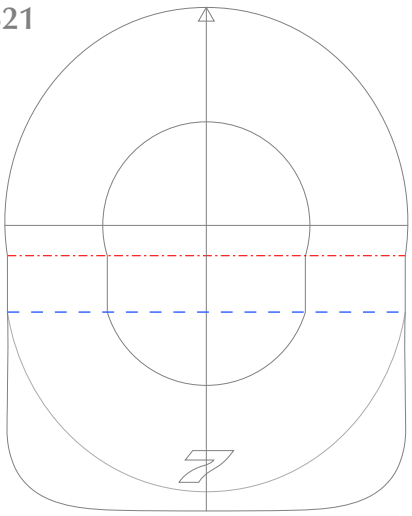

S22

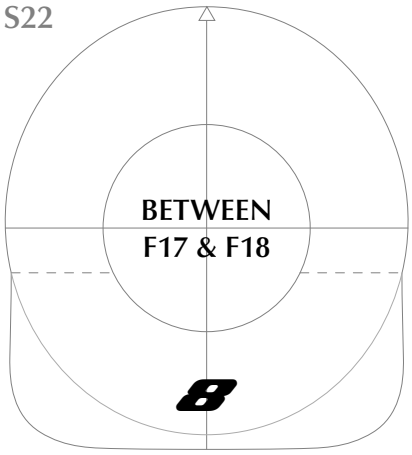

S23

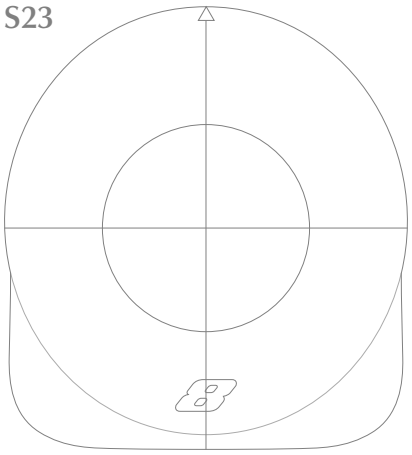

S24

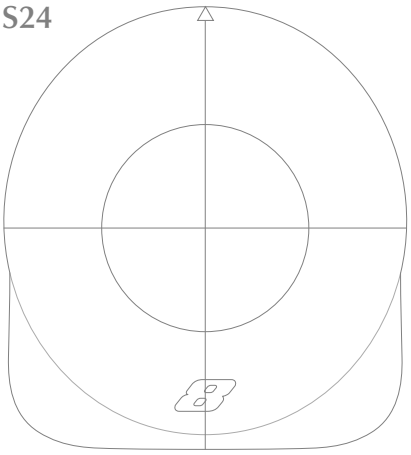

S25

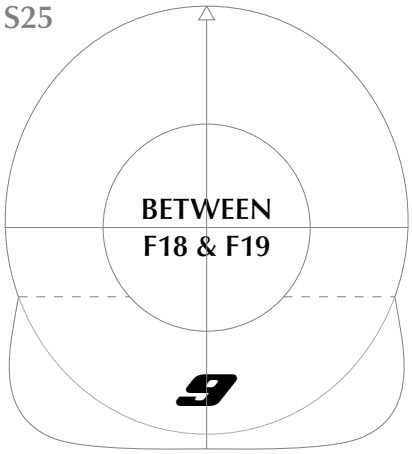

S26

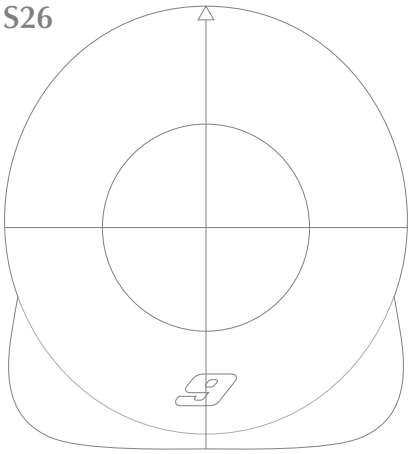

S27

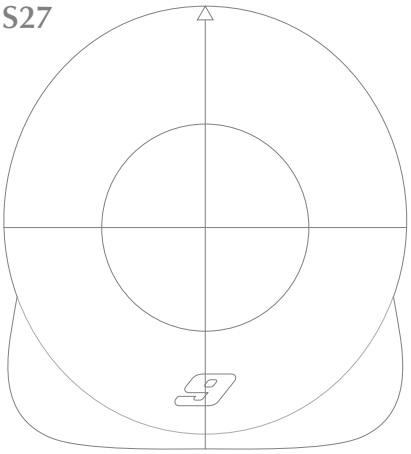

S40



S41

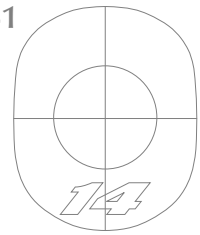

S42

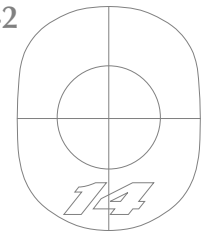



S43



S44



S45

© 2024 CityCraft

S28

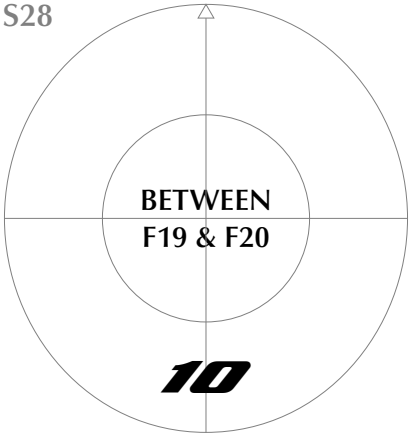

S29

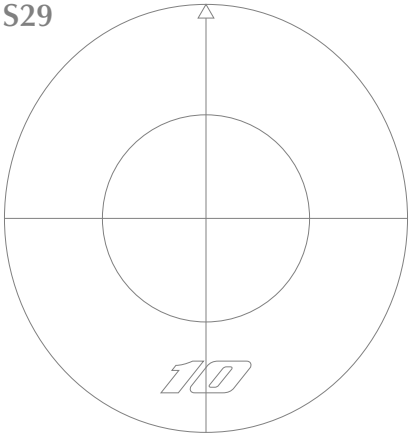

S30

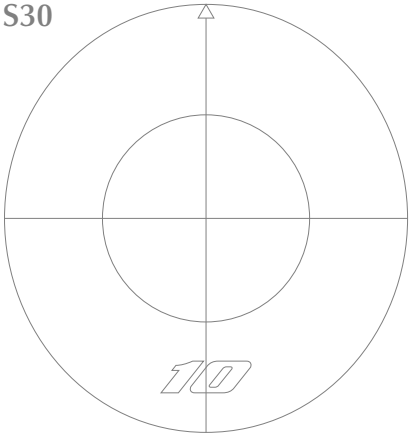

S31

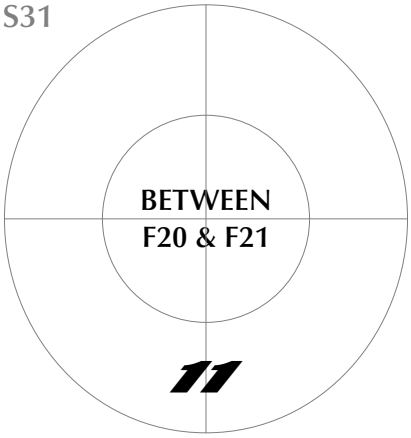

S32

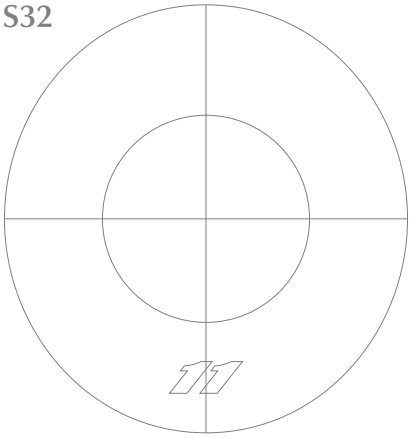

S33

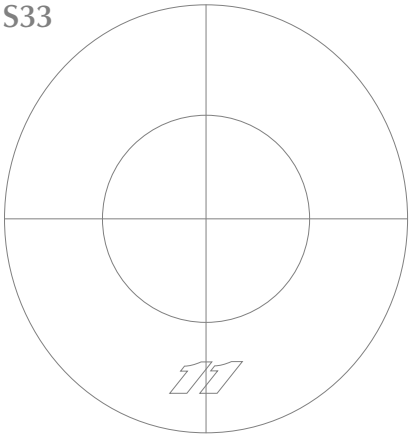

S34

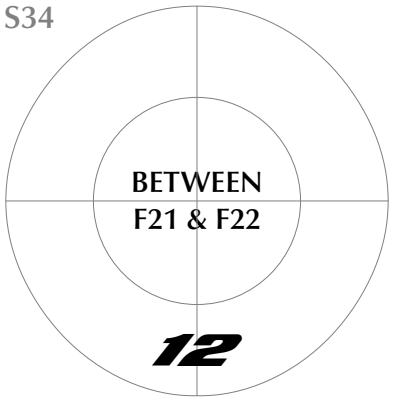

S35

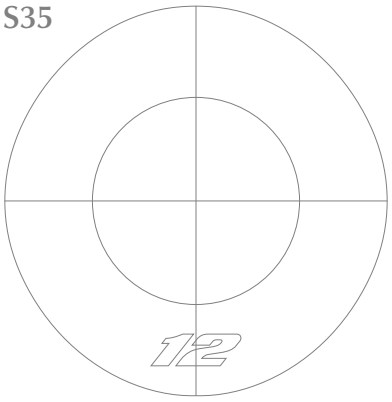

S36

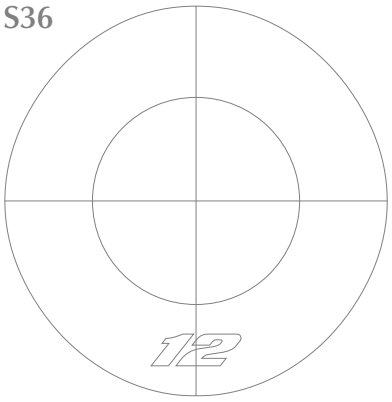

S37

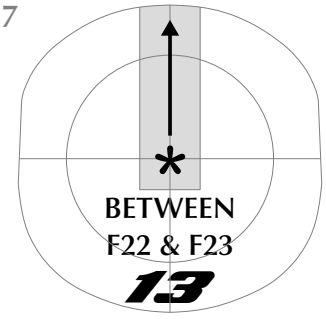

S38

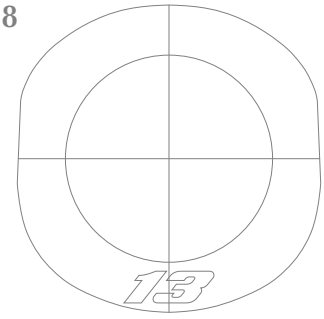

S39

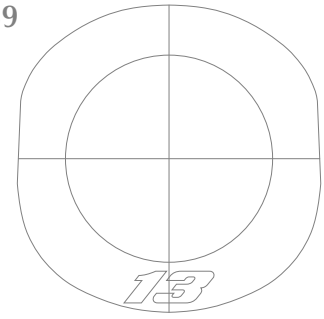

© 2024 CityCraft

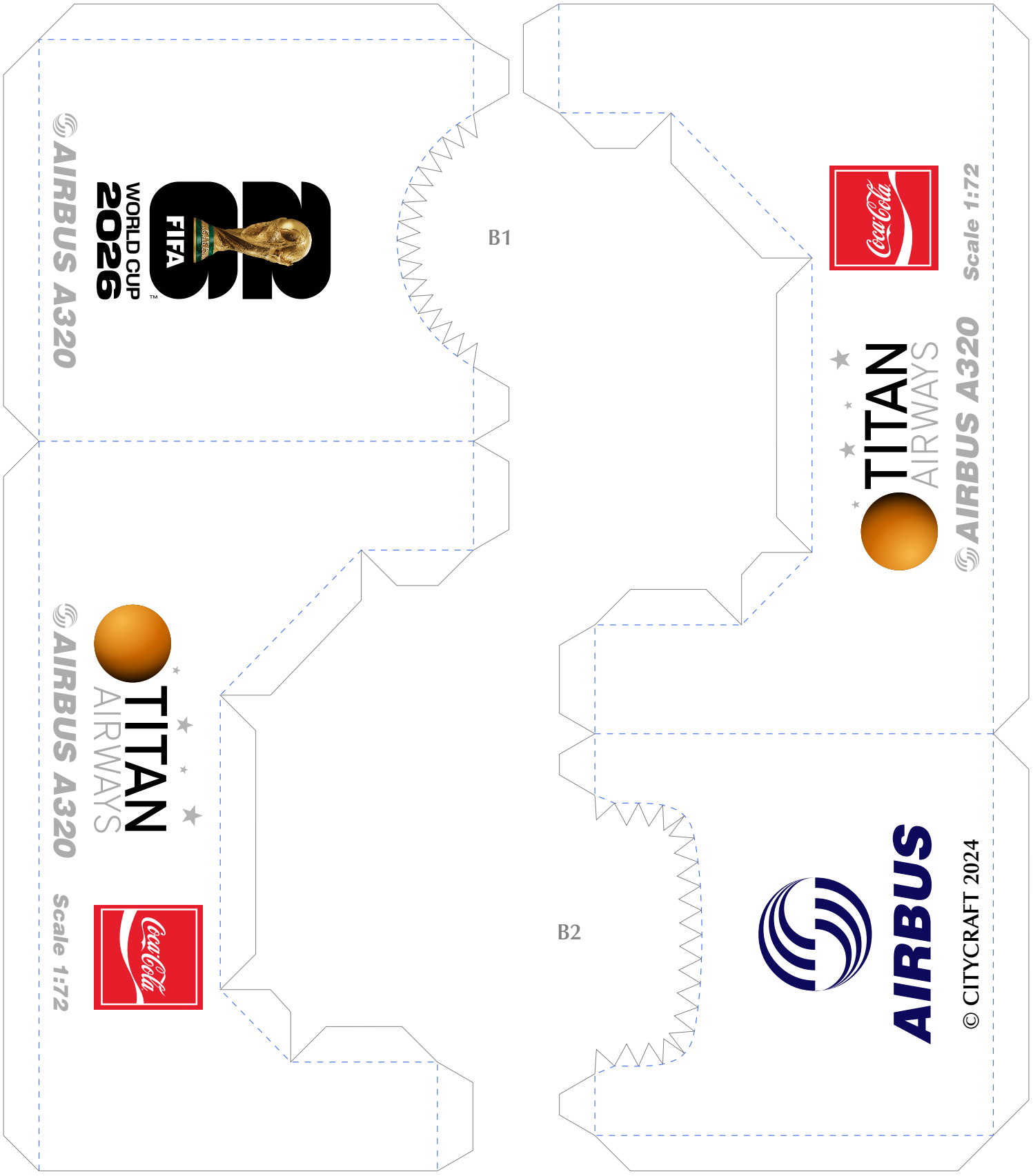
AIRBUS A320
FIFA WORLD CUP 2026
B1
Coca-Cola
TITAN AIRWAYS
AIRBUS A320
Scale 1:72
AIRBUS A320
TITAN AIRWAYS
Coca-Cola
Scale 1:72
B2
AIRBUS
© CITYCRAFT 2024

B5

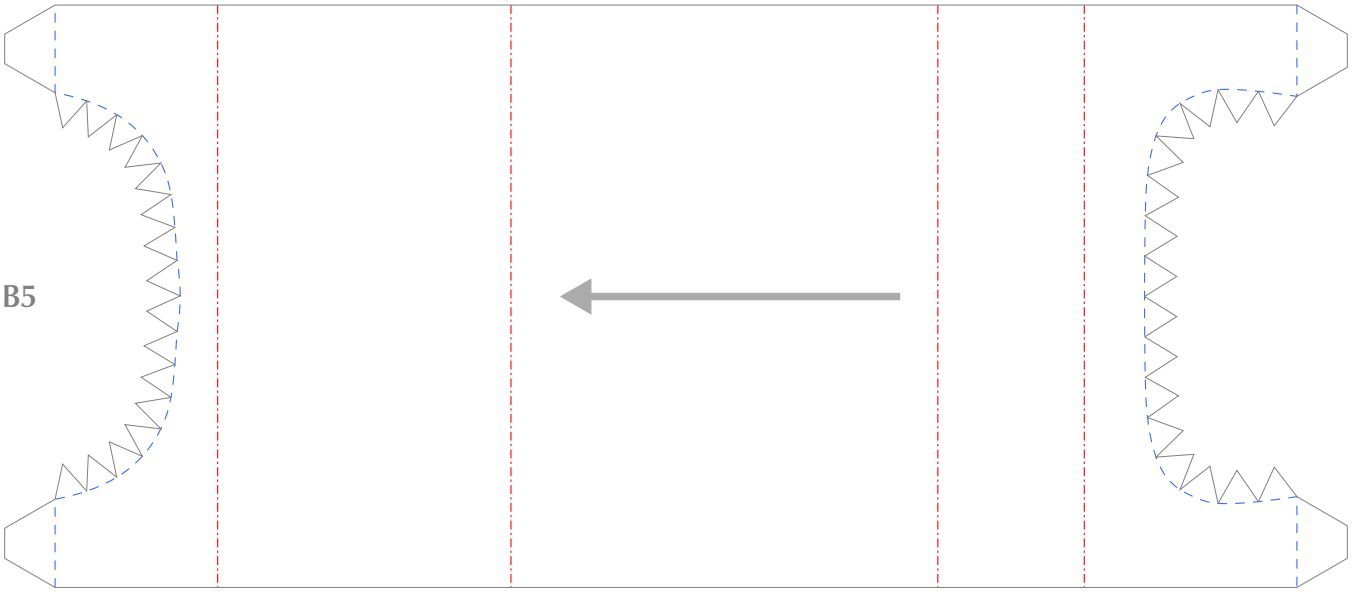

B3

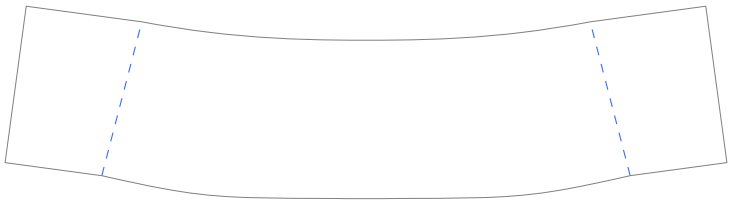

B4



B6

CITYCRAFT™
PAPERMODELS



⚠ **WARNING:**
CHOKING HAZARD - Small parts
not for childen under 5 years



⚠ **WARNING:**
Be careful of **SHARP EDGES**
Not for childrens under 5 years.

© 2024 CityCraft All Rights Reserved
Model designed by Mario Solorzano
www.citycraft-papermodels.com

THIS MODEL IS FREE!!
PLEASE DO NOT SELL THE FILE!!

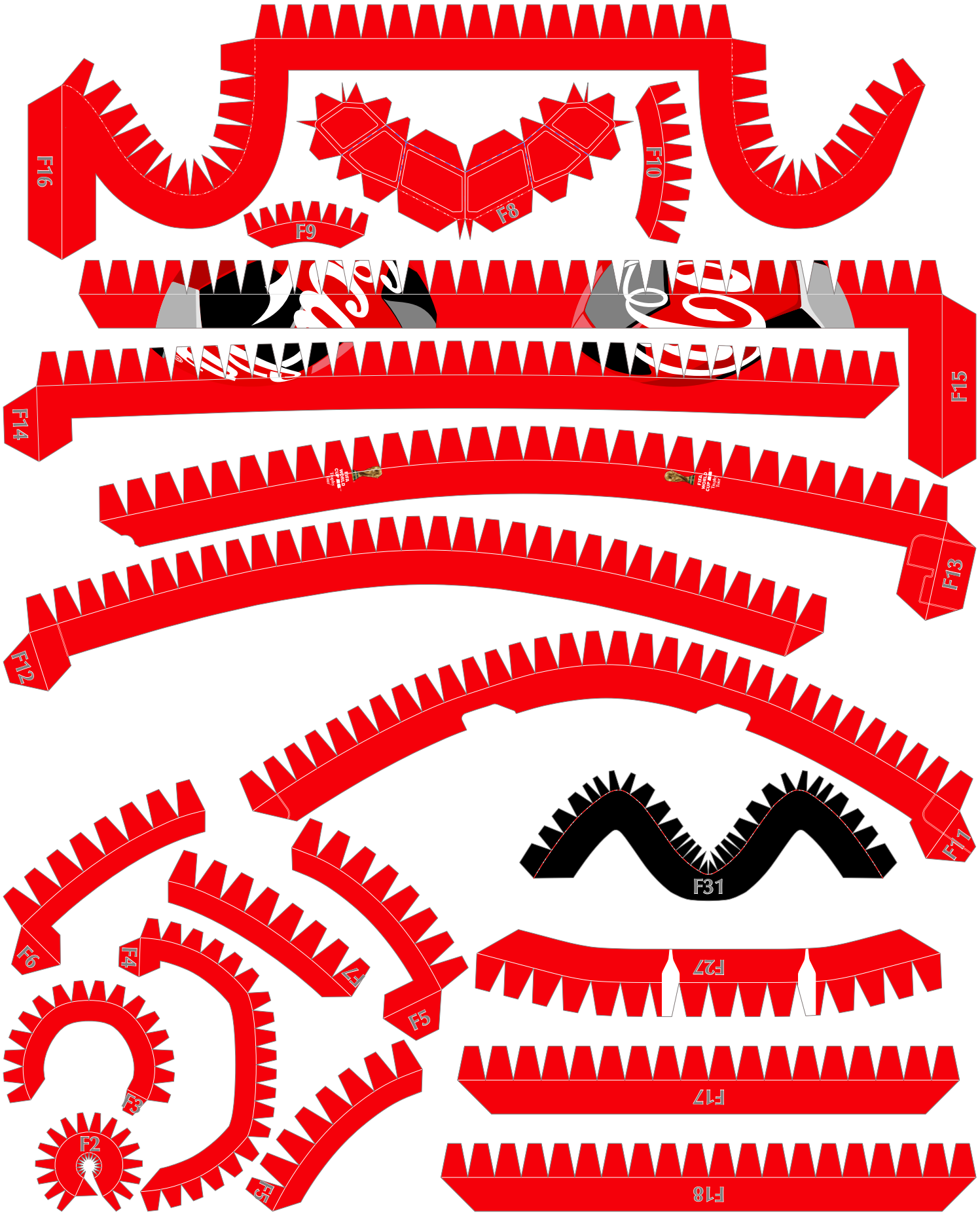

© 2024 CityCraft
Scale 1:72

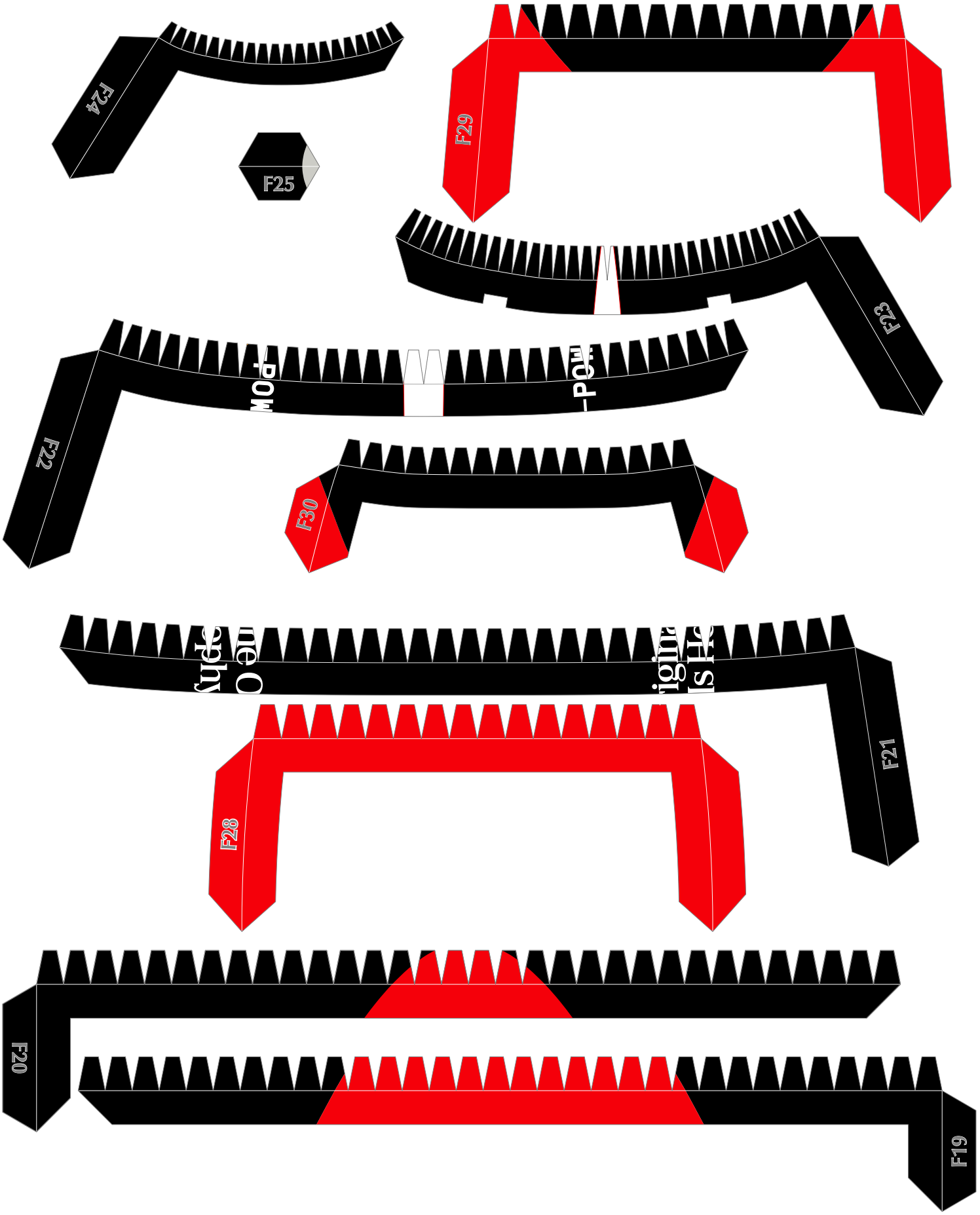

© 2024 CityCraft

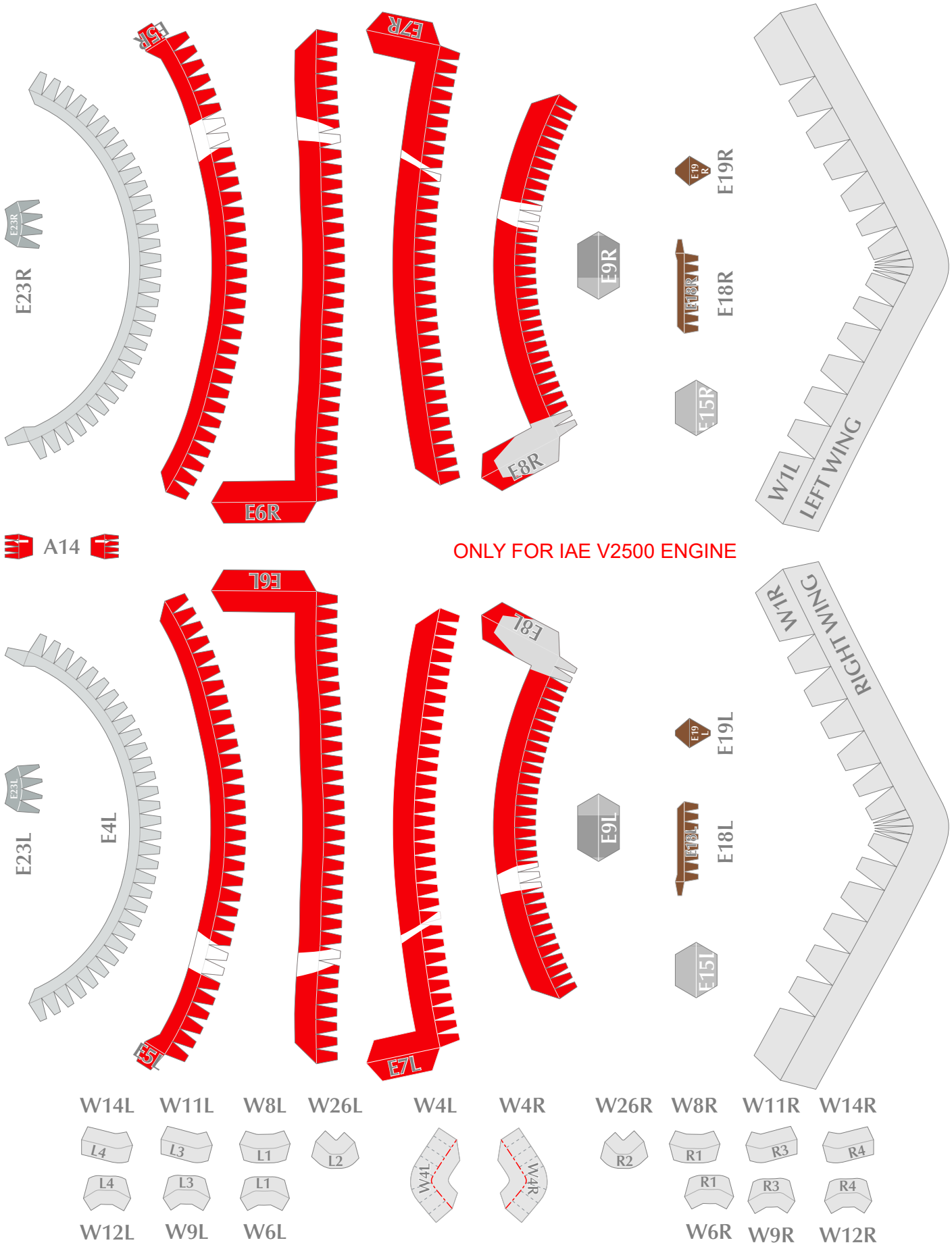
E23R
E5R
E6R
E7R
E8R
E9R
E19R
E18R
E15R
W1L
LEFT WING
A14
ONLY FOR IAE V2500 ENGINE
E23L
E4L
E5L
E6L
E7L
E8L
E9L
E19L
E18L
E15L
W1R
RIGHT WING
W14L
W11L
W8L
W26L
W4L
W4R
W26R
W8R
W11R
W14R
L4
L3
L1
L2
R2
R1
R3
R4
W12L
W9L
W6L
W6R
W9R
W12R